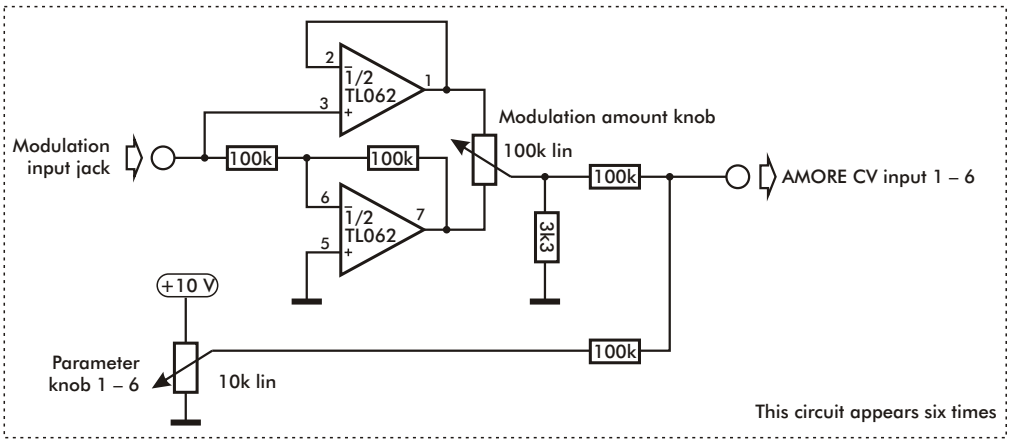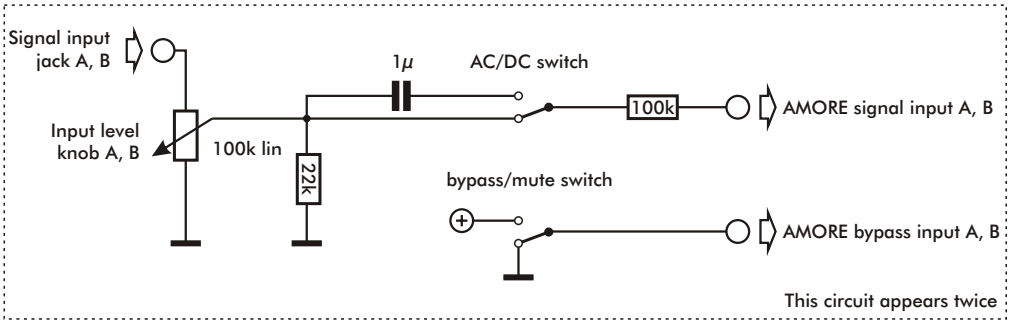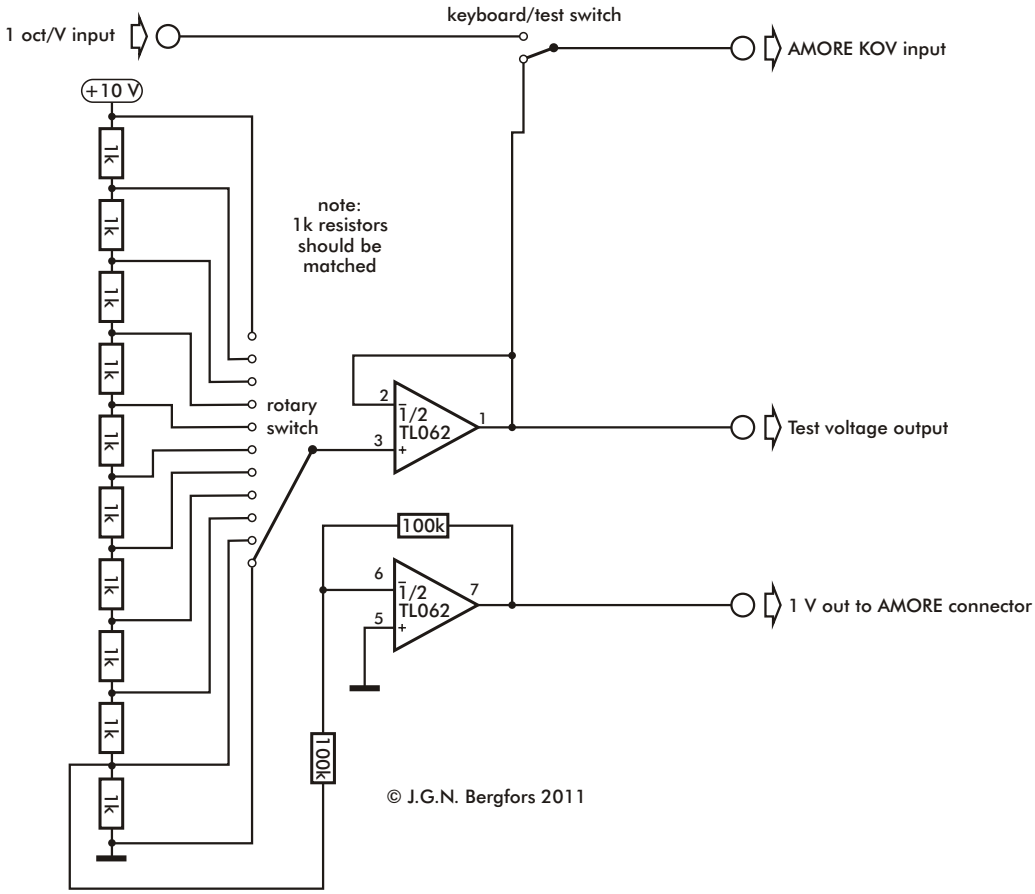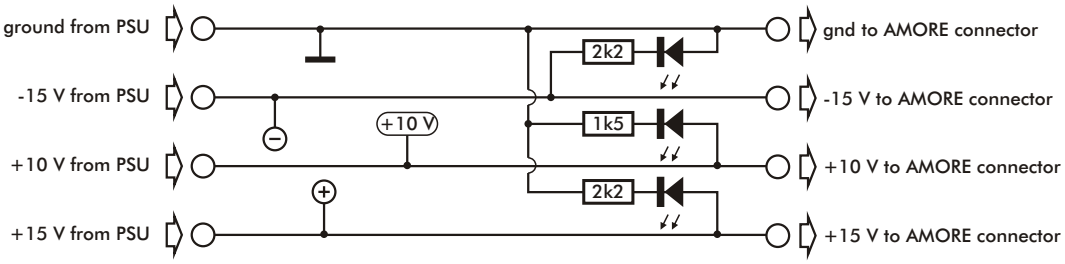AMORE EXERCISER