AMORE STARTER KIT
VCO/VCLFO + LFO

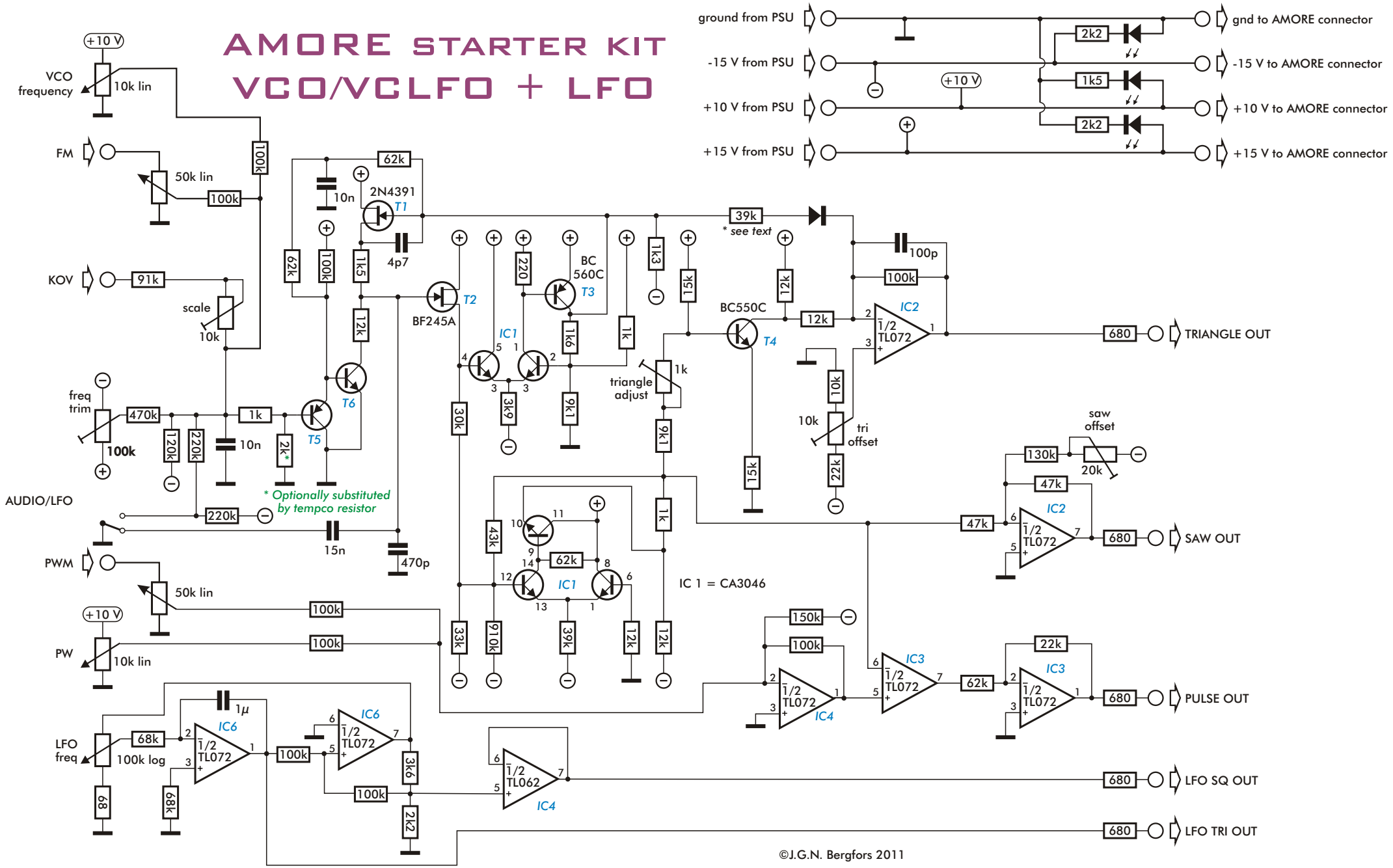

©J.G.N. Bergfors 2011