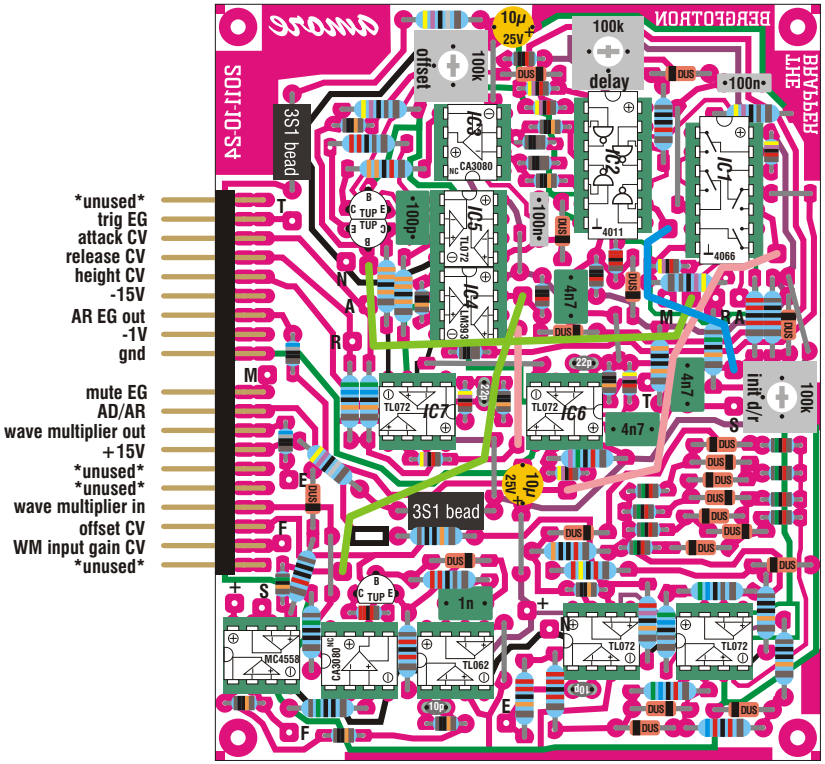
unused
trig EG
attack CV
release CV
height CV
-15V
AR EG out
-1V
gnd
mute EG
AD/AR
wave multiplier out
+15V
unused
unused
wave multiplier in
offset CV
WM input gain CV
unused
3S1 bead
offset
100k
delay
100k
10µ
25V
100n
IC3
CA3080
IC2
4011
IC1
4066
IC5
TL072
IC4
LM393
100p
4n7
22p
IC7
TL072
IC6
TL072
4n7
init d/r
100k
3S1 bead
1n
MC4558
CA3080
TL062
TL072
TL072
10p
DUS