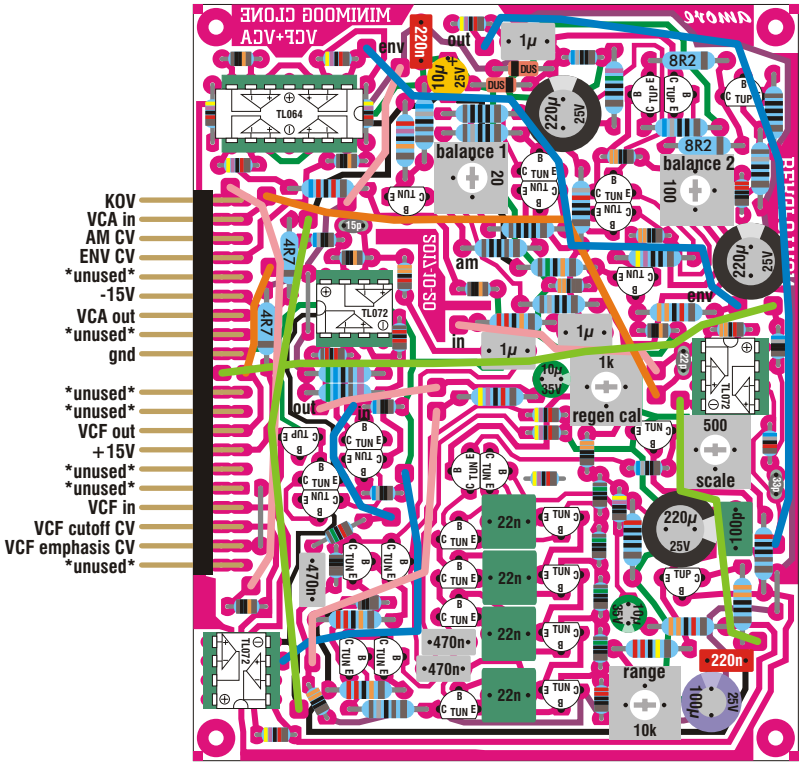
KOV
VCA in
AM CV
ENV CV
unused
-15V
VCA out
unused
gnd
unused
unused
VCF out
+15V
unused
unused
VCF in
VCF cutoff CV
VCF emphasis CV
unused
MINIMOOG CLONE
VCF+VCA
TL064
TL072
4R7
4R7
15p
SOLTO-SO
220n
10µ
25V
env
out
1µ
DUS
220µ
25V
balance 1
20
am
in
1µ
out
470n
470n
470n
22n
22n
22n
22n
8R2
8R2
balance 2
100
220µ
25V
env
1µ
1k
10µ
25V
regen cal
500
scale
220µ
25V
100p
10µ
35V
range
10k
220n
100µ
35V
TL072
TL072
TL072
TUN
TUP