VC DIVIDE-BY-N

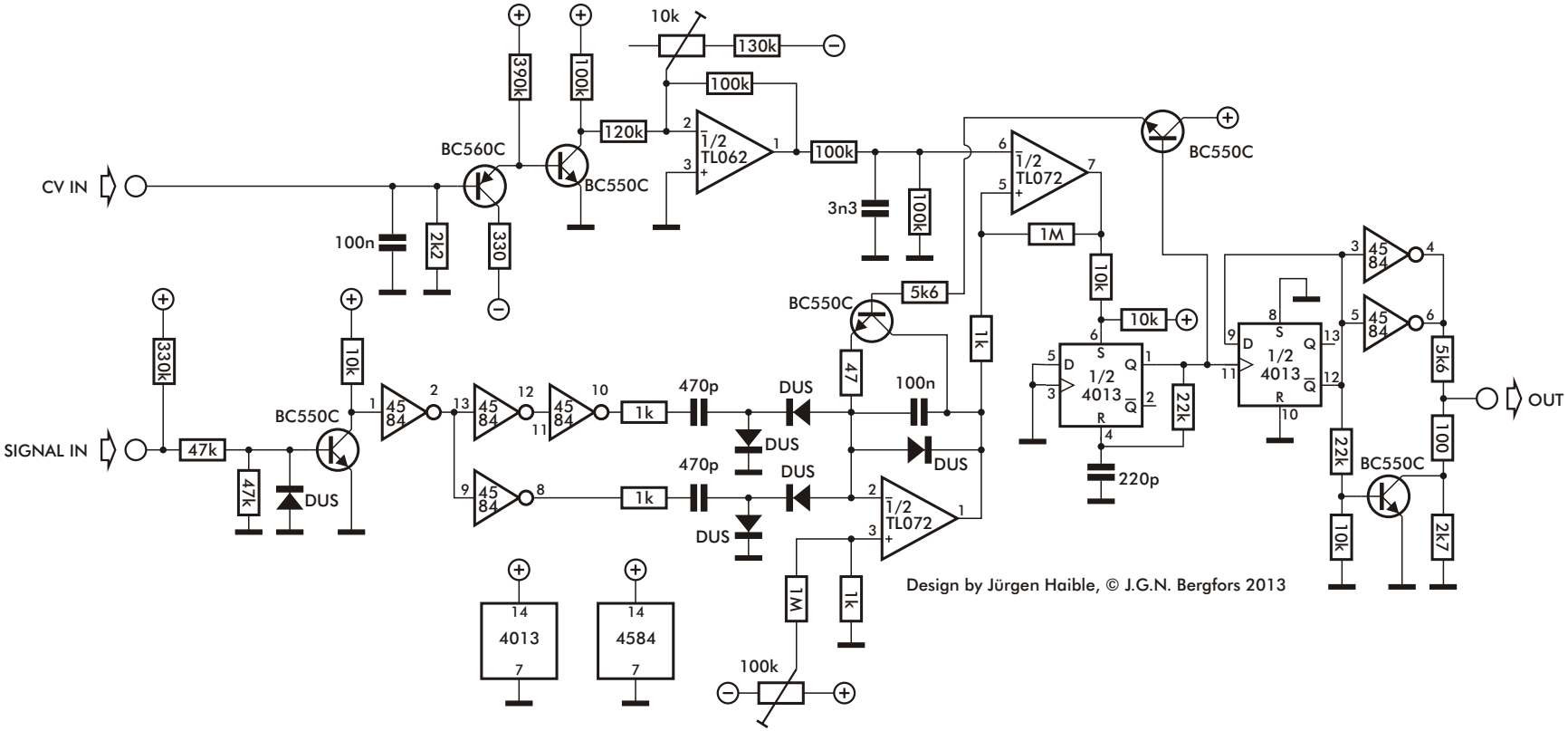

Design by Jürgen Haible, © J.G.N. Bergfors 2013