DUAL VCO

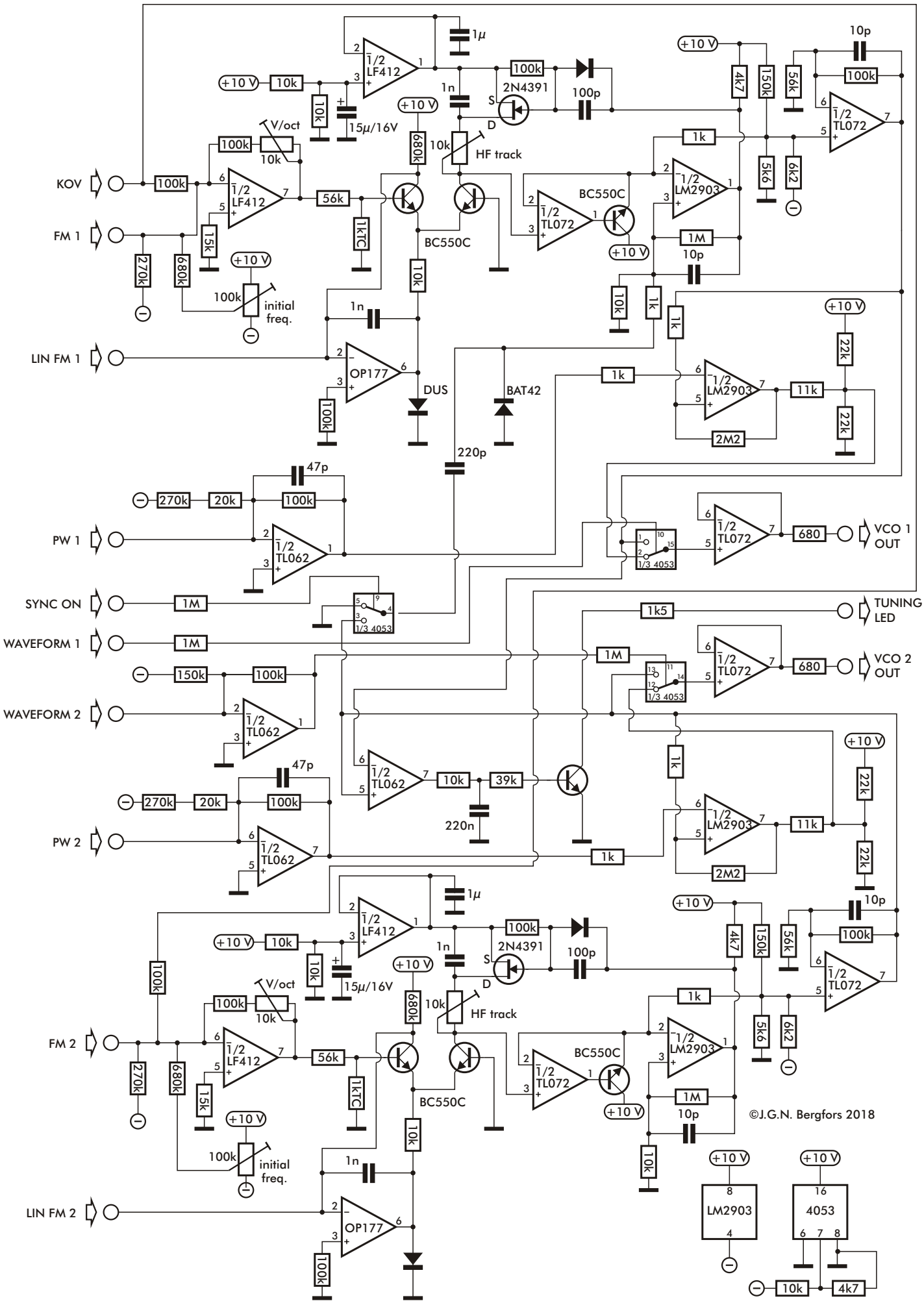
KOV
FM 1
LIN FM 1
PW 1
SYNC ON
WAVEFORM 1
WAVEFORM 2
PW 2
FM 2
LIN FM 2
VCO 1 OUT
VCO 2 OUT
TUNING LED
V/oct
HF track
initial freq.
1/2 LF412
1/2 TL072
1/2 LM2903
1/2 TL062
OP177
2N4391
BC550C
BAT42
DUS
1/3 4053
LM2903
4053
©J.G.N. Bergfors 2018