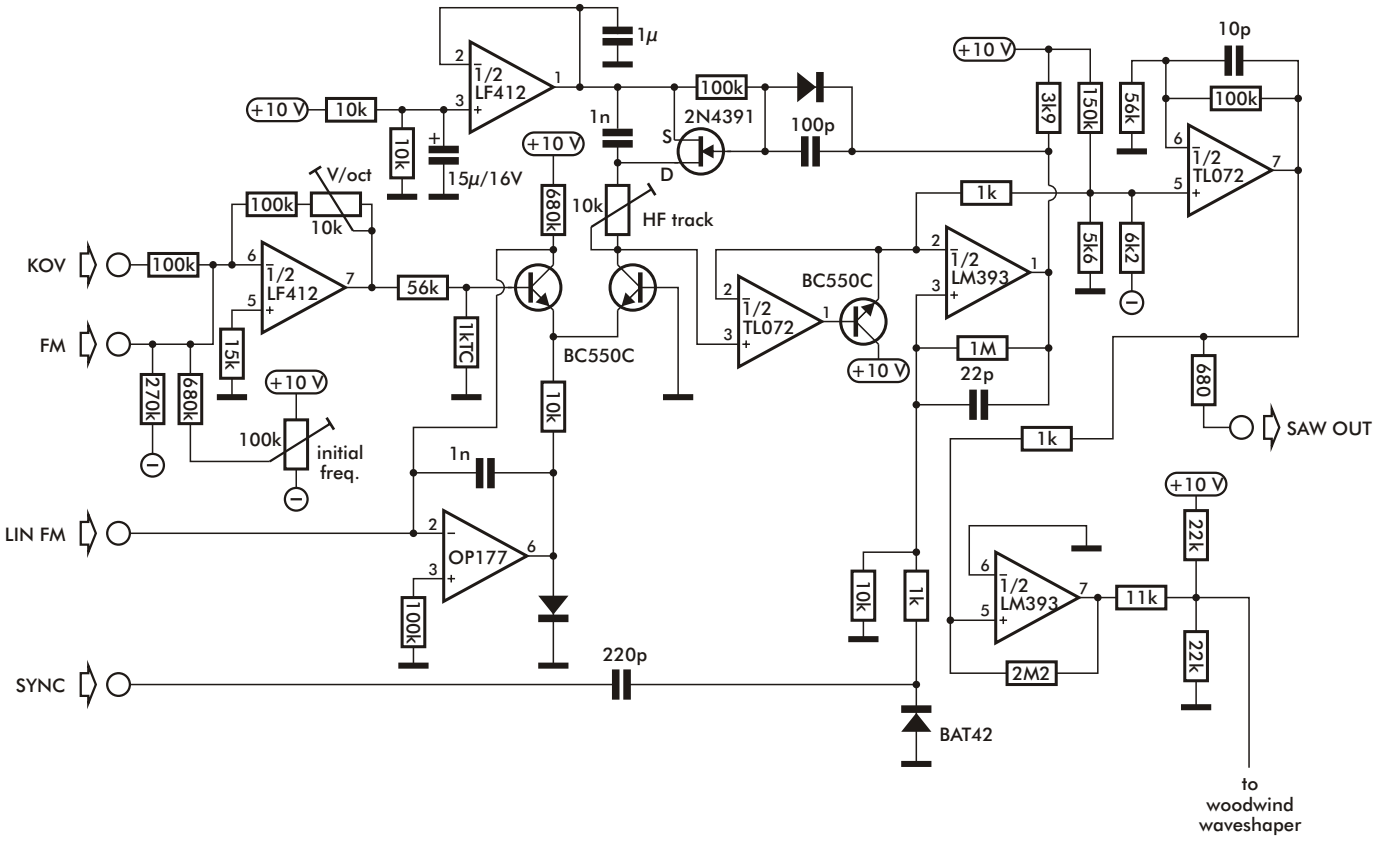Woodwind VCO core